SCORPION VISION LTD

PRODUCT SPECIFICATION

M12 Lens 12mm F5.6

SVL-1256SMAC

Focal Length	12mm
F Number	f5.6
Iris	Non Adjustable
Mount	M12
Format	1/ 1.8”
IR Block	No IR Block
Resolution	3MP
Horizontal Field of View	30.6 Degrees
Distortion	<-0.2%
Back Focus	6.48mm
Working Distance	0.1m - ∞
Design Wavelength	400-950nm
Operating Temperature	-20° C ~ +65° C
CRA	15.53°

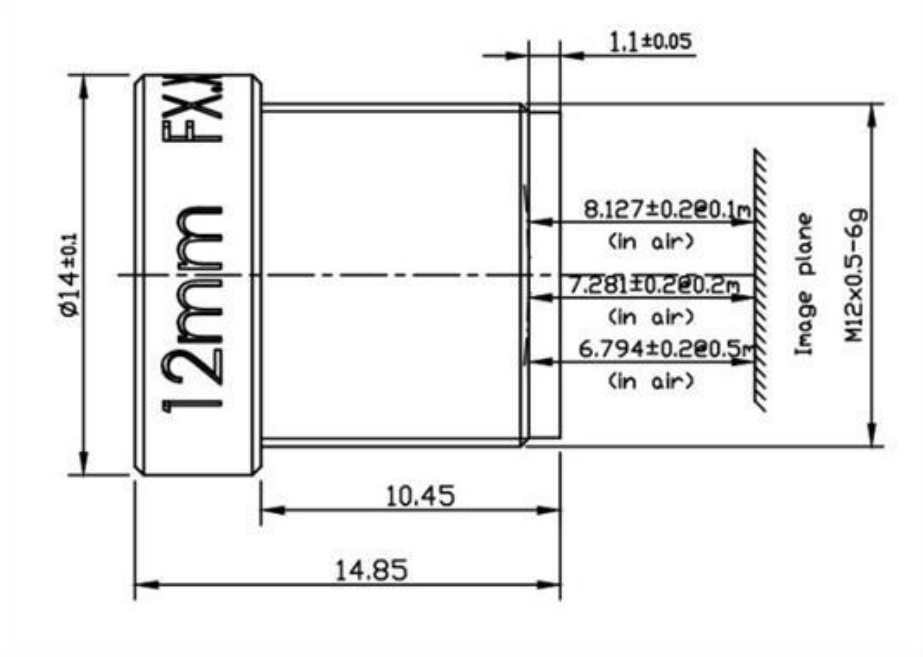
1.1±0.05
FXJ
12mm
Ø14±0.1
8.127±0.2@0.1m
(in air)
7.281±0.2@0.2m
(in air)
6.794±0.2@0.5m
(in air)
Image plane
M12x0.5-6g
10.45
14.85

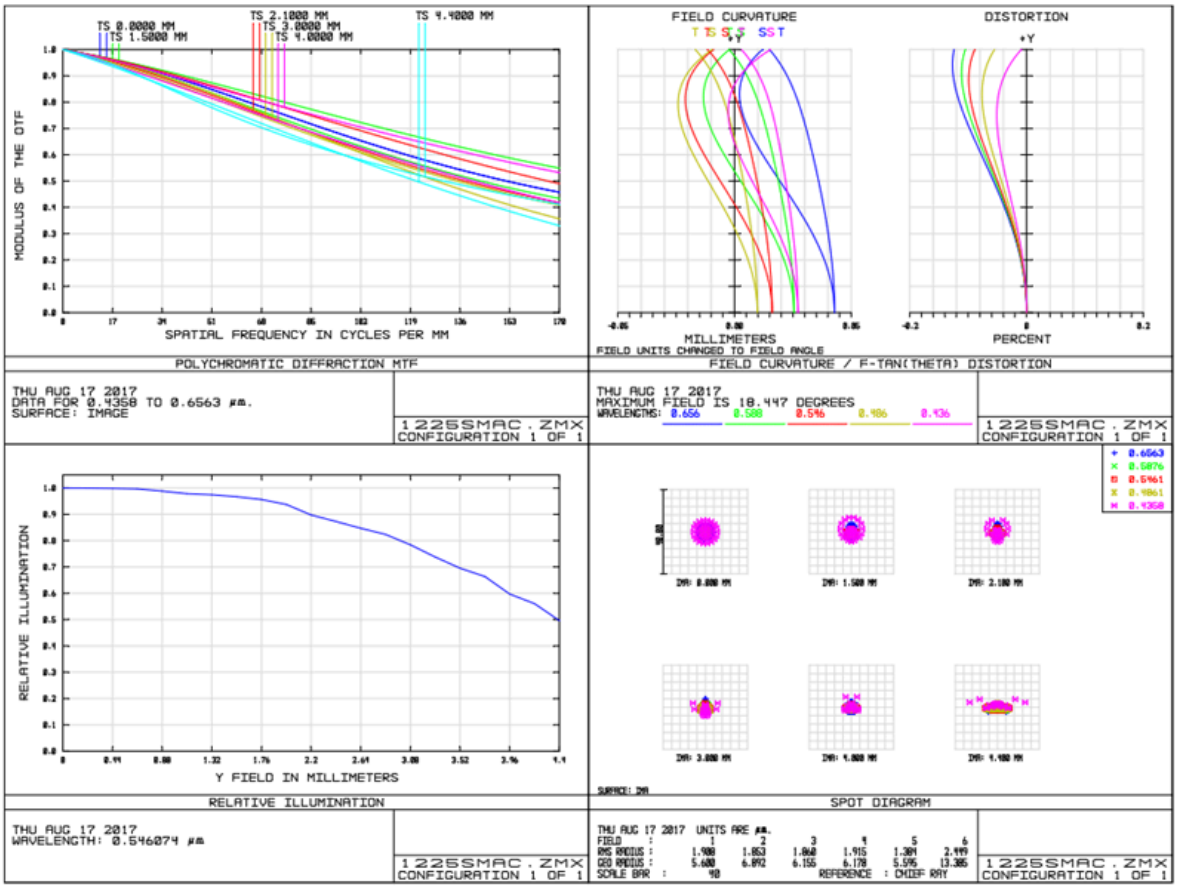
TS 0.0000 MM
TS 1.5000 MM
TS 2.1000 MM
TS 3.0000 MM
TS 4.0000 MM
TS 4.4000 MM
MODULUS OF THE OTF
SPATIAL FREQUENCY IN CYCLES PER MM
POLYCHROMATIC DIFFRACTION MTF
THU AUG 17 2017
DATA FOR 0.4358 TO 0.6563 µm.
SURFACE: IMAGE
1225SMAC.ZMX
CONFIGURATION 1 OF 1
FIELD CURVATURE
DISTORTION
MILLIMETERS
PERCENT
FIELD UNITS CHANGED TO FIELD ANGLE
FIELD CURVATURE / F-TAN(THETA) DISTORTION
THU AUG 17 2017
MAXIMUM FIELD IS 18.447 DEGREES
WAVELENGTHS: 0.656 0.588 0.546 0.486 0.436
1225SMAC.ZMX
CONFIGURATION 1 OF 1
RELATIVE ILLUMINATION
Y FIELD IN MILLIMETERS
RELATIVE ILLUMINATION
THU AUG 17 2017
WAVELENGTH: 0.546074 µm
1225SMAC.ZMX
CONFIGURATION 1 OF 1
SPOT DIAGRAM
THU AUG 17 2017 UNITS ARE µm.
FIELD : 1 2 3 4 5 6
RMS RADIUS : 1.908 1.853 1.860 1.915 1.384 2.999
GEO RADIUS : 5.680 6.092 6.155 6.178 5.596 13.385
SCALE BAR : 40
REFERENCE : CHIEF RAY
1225SMAC.ZMX
CONFIGURATION 1 OF 1